Hillmar
Hillmar Industries Ltd.
7371 Vantage Way
Delta, BC V4G 1C9
P:604 946-7115 F:604 946-0329
info@hillmar.com www.hillmar.com

COUPLING RKM
RKM-360-LSH-1000-30-29100
SPECIFICATION SHEET
SLS & MKTG
ENGLISH

Sheet Number:			
Job Number:			
Form Number: 429-660-46826PT			
Company / Project Reference:	Date.:	Page.: 1 OF 1	Document Package No.: / Rev.:

Inventor Drawing

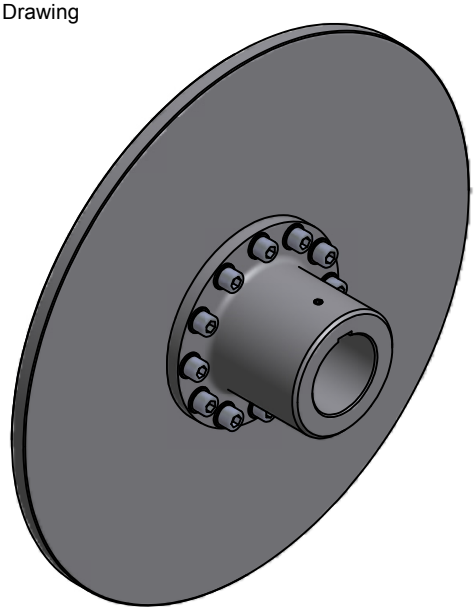

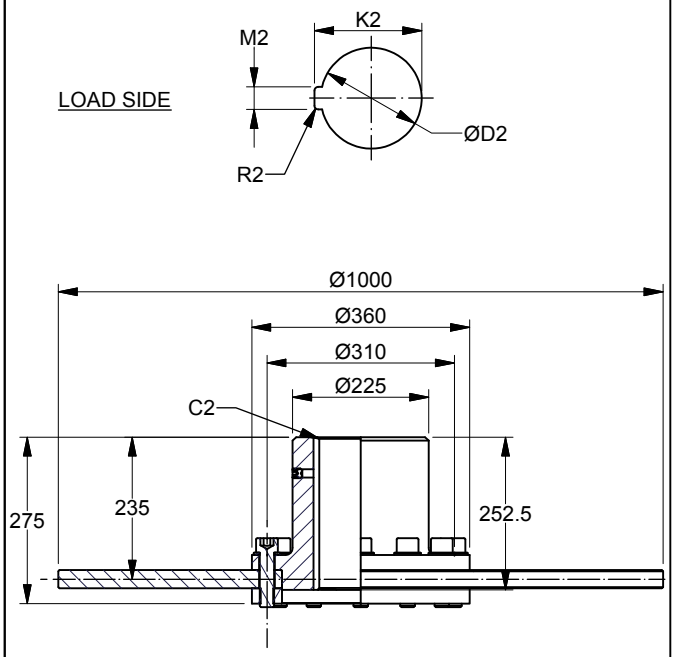

FEATURE	CODE
Rigid coupling	RKM
Coupling size (Hub OD)	360
Load side	LSH
Disc diameter (mm)	1000
Disc thickness (mm)	30
Maximum coupling torque (Nm)	29100

Example for ordering	RKM-360-LSH-1000-30-29100

TECHNICAL DATA

Disc model	SDBD-1000-30-360
Disc diameter (mm)	1000
Hub bore size MIN. (mm)	100
D2 MAX. (mm)	160
Moment of inertia (kgm^2)	24.075
Mounting bolts	12 x M24
Bolt tightening torque (Nm)	710
MAX. coupling torque TkMAX (Nm)	29100
MAX. coupling speed (RPM)	1750
Weight (kg)	257

CUSTOMER SPECIFICATIONS

Load side
D2:_____mm
M2:_____mm
K2:_____mm
R2:_____mm
C2:_____mm

NOTES

Coupling balancing grade ISO 1940-G6.3 is guaranteed for all coupling parts.

All figures are nominal figures only

All dimensions are in millimeters

Document Template #710-101-62058

** ALL TECHNICAL DATA IS SUBJECT TO CHANGE WITHOUT NOTICE **
Hillmar works have a fully registered ISO 9001-2008 quality assurance programme (QCB #01-1525)

C:\TEMP\a3f49bb3-e10c-4cd0-aed8-26c1c4c1b337\80000528393\HILLMAR\HILLMAR PRODUCTION\04 THRUSTER DB\0700-4\07004005 PKM-GKM-RKSM-RKX\SPC-SHT-PKM-GKM-RKSM-RKX\04 RKX\46826 RKM-360-LSH-1000-30-29100.idw